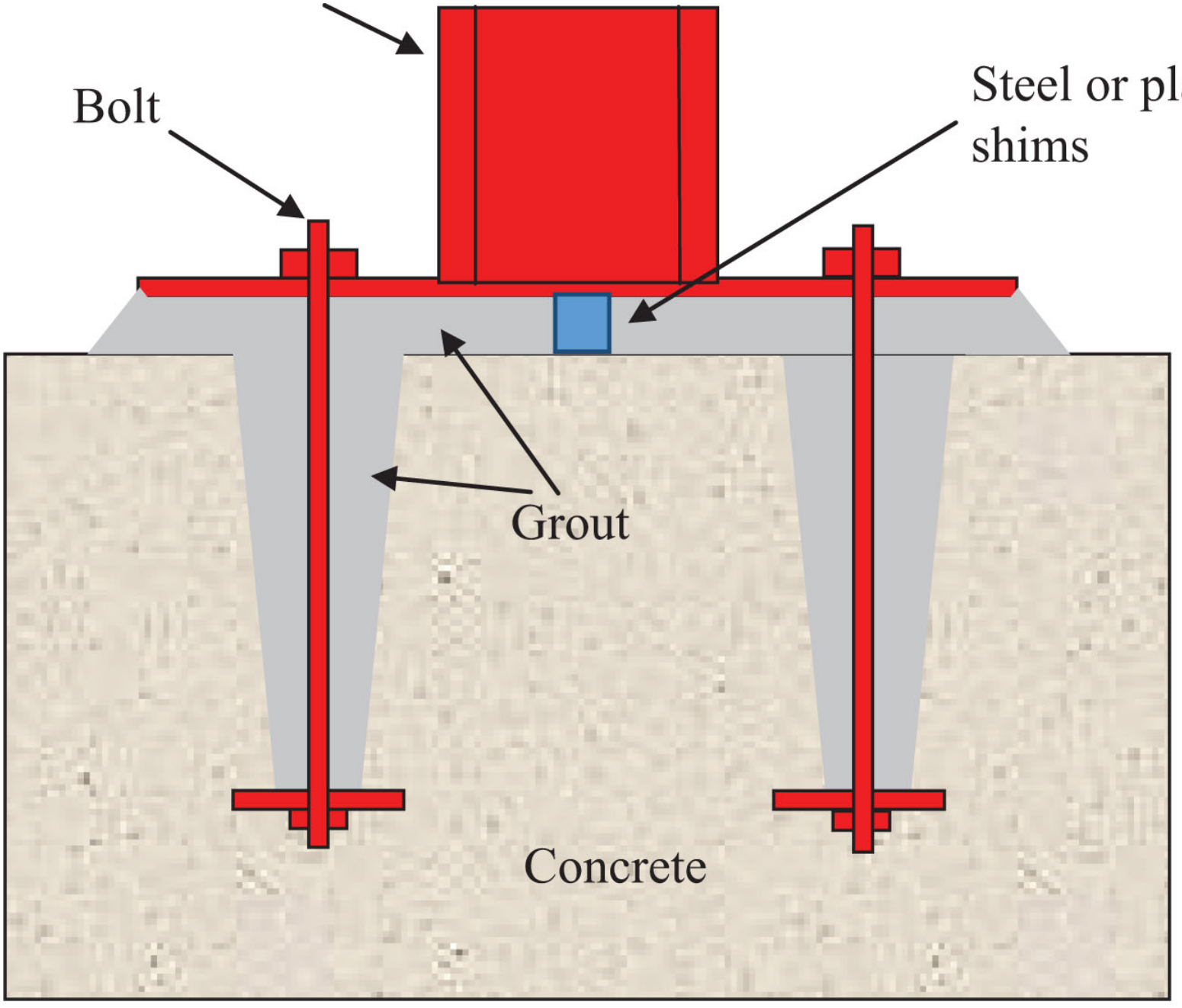
Steel column
Bolt
Steel or plastic shims
Grout
Concrete