3.4 LOOP METHOD *

We have already seen several examples of a complementary relationship between voltage and current, so it should come as no surprise that there is a simplified analysis method based on an astute choice of current variables that closely parallels the method in the preceding section. Here we choose current variables that flow in loops, that is, in closed paths. By this definition, the current flowing into any node will always be identically equal to the current flowing out, so *KCL is identically satisfied*. As in Chapter 2, we continue to define loop currents until every element is traversed by at least one loop current. To illustrate, let us define a set of current loops for the circuit we previously analyzed, as in Figure 3.31. KCL at Node 1 gives

$$(i_1 + i_2) - i_1 - i_2 = 0 \tag{3.87}$$

which is identically zero for all values of i. Thus because KCL is automatically satisfied for this choice of current variables, we have to write only KVL and the constituent relations. Combining these in one step, we obtain

$$-V + (i_1 + i_2)R_1 + i_1R_2 = 0 \tag{3.88}$$

$$-i_1R_2 + i_2R_3 + (i_2 + I)R_4 = 0. \tag{3.89}$$

Now rewrite to place the source terms on the left:

$$V = i_1(R_1 + R_2) + i_2R_1 \tag{3.90}$$

$$IR_4 = i_1R_2 - i_2(R_3 + R_4). \tag{3.91}$$

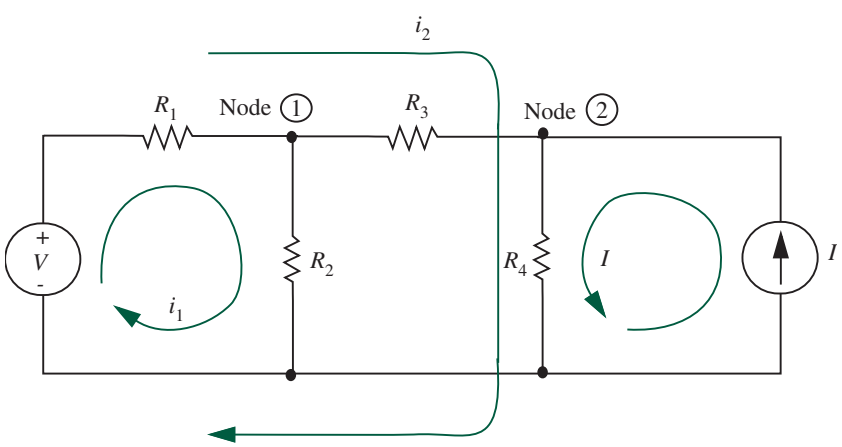

FIGURE 3.31 Loop currents.

By Cramer's Rule,

$$i_1 = \frac{V(R_3 + R_4) + IR_4R_1}{(R_1 + R_2)(R_3 + R_4) + R_1R_2}. \tag{3.92}$$

The voltage across R_2 can now be found from Equation 3.92 and

$$e_1 = i_1R_2. \tag{3.93}$$

Equations 3.92 and 3.93 can be reduced to Equation 3.8 by simple algebra.

EXAMPLE 3.13 LOOP METHOD Let us use the loop method to analyze the circuit depicted in Figure 3.18 in our previous example. Figure 3.32 shows our choice of the loops for this circuit.

The corresponding loop equations are

$$-V + i_1R_1 + (i_1 - i_2)R_2 + (i_1 - i_3)R_4 = 0 \tag{3.94}$$

$$(i_2 - i_1)R_2 + i_2R_3 + (i_2 - i_3)R_6 = 0 \tag{3.95}$$

$$(i_3 - i_1)R_4 + (i_3 - i_2)R_6 + i_3R_5 = 0. \tag{3.96}$$

By rearranging the terms into matrix form, we obtain

$$\begin{bmatrix} R_1 + R_2 + R_4 & -R_2 & -R_4 \\ -R_2 & R_2 + R_3 + R_6 & -R_6 \\ -R_4 & -R_6 & R_4 + R_5 + R_6 \end{bmatrix} \begin{bmatrix} i_1 \\ i_2 \\ i_3 \end{bmatrix} = \begin{bmatrix} V \\ 0 \\ 0 \end{bmatrix}.$$

Assigning the same values to the voltage source and resistors,

$$V = 5 \text{ V}$$

$$R_1 = 50\ \Omega$$

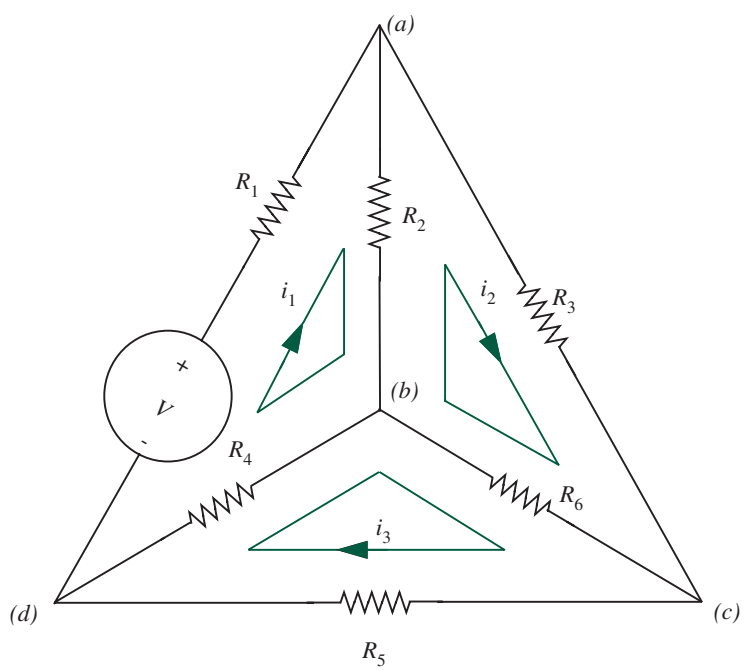

FIGURE 3.32 Circuit with properly assigned current loops.

$$R_2 = 100\ \Omega$$

$$R_3 = 100\ \Omega$$

$$R_4 = 75\ \Omega$$

$$R_5 = 75\ \Omega$$

$$R_6 = 150\ \Omega$$

we obtain

$$\begin{bmatrix} 225 & -100 & -75 \\ -100 & 350 & -150 \\ -75 & -150 & 300 \end{bmatrix} \begin{bmatrix} i_1 \\ i_2 \\ i_3 \end{bmatrix} = \begin{bmatrix} 5 \\ 0 \\ 0 \end{bmatrix}.$$

Solving, we have $i_1 = 2/55$ A, $i_2 = 1/55$ A, and $i_3 = 1/55$ A. As a sanity check, the current flowing through R_6 is $i_2 - i_3 = 0$, as desired.