EXAMPLE 4.22 SMALL SIGNAL ANALYSIS USING A PIECEWISE LINEAR DIODE MODEL In the diode regulator example, we used the piecewise linear model for the diode when conducting the DC operating point analysis, but reverted to the accurate diode equation when computing the small signal resistance. This example will illustrate that small signal analysis of nonlinear devices can also be carried out by using their piecewise linear models for both the DC operating point analysis and in computing the small signal device resistance. Of course, the accuracy of the results will depend on the fidelity of the piecewise linear model used for the nonlinear device.

The example will be based on the simple diode-resistor circuit shown in Figure 4.46. Let us suppose we are interested in the small signal values of the output voltage and the diode current for a 50-mV incremental input. As promised, throughout this example, we will use the piecewise linear model for the diode illustrated in Figures 4.33a and 4.33b.

We start by drawing the DC subcircuit to determine the operating point variables I_D, V_O as shown in Figure 4.46b. By inspection, we can write

$$I_D = \frac{5 - 0.6}{R}.$$

For $R = 1000\ \Omega$, $I_D = 4.4$ mA and $V_O = 0.6$ V.

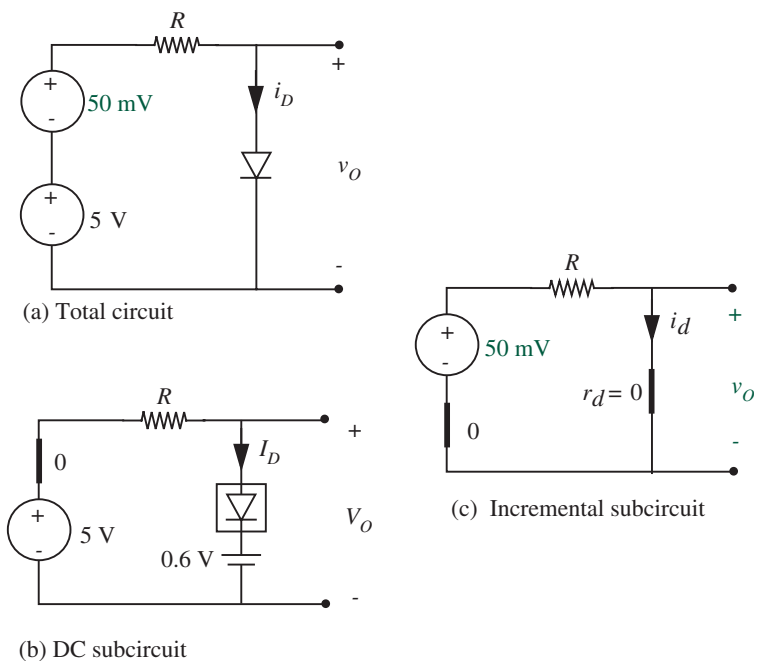

FIGURE 4.46 A simple diode-resistor circuit.

Next, we draw the incremental subcircuit for the operating point given by $I_D = 4.4$ mA and $V_O = 0.6$ V. Since we chose to use the piecewise linear model for the diode throughout our analysis, we must derive r_d based on this model. Since $I_D > 0$, notice that the diode is operating in the vertical segment of the piecewise linear v–i curve shown in Figure 4.33b. Since the reciprocal of the slope of this curve segment is zero, r_d is also zero. In other words, the ideal diode looks like a short circuit for incremental changes in the current. Figure 4.46c shows the corresponding incremental subcircuit.

From Figure 4.46c, it is easy to see that the incremental change in the output voltage for the 50-mV change in the input voltage is simply

$$v_o = 0.$$

Similarly, the incremental change in the current is given by

$$i_d = \frac{50 \text{ mV}}{\text{R}} = 50\ \mu\text{A}.$$
