**EXAMPLE 13.7 MAXIMIZING POWER TRANSFER USING A TRANSFORMER** One use of the transformer discussed in Section 9.3.4 is to match impedances between two halves of a circuit, and in doing so to maximize the power transfered from a source to a load. For example, consider connecting a source having a 1-V-peak and 50-Ω Thévenin equivalent operating in the sinusoidal steady state to a 1800-Ω load as shown in Figure 13.56.

In the case of this direct connection, the voltage across the load is

$$\frac{1800}{1850}\ 1\ \text{V}\ \sin(\omega t),$$

and so the time average power delivered to the load is approximately 0.26 mW; note that the time average of $\sin^2(\omega t)$ is 0.5.

Next, consider the circuit shown in Figure 13.57. In this circuit, an ideal transformer having $N_1$ primary turns and $N_2$ secondary turns is inserted between the source and load; with help from Figure 9.30, an equivalent model of this circuit is shown in Figure 13.58.

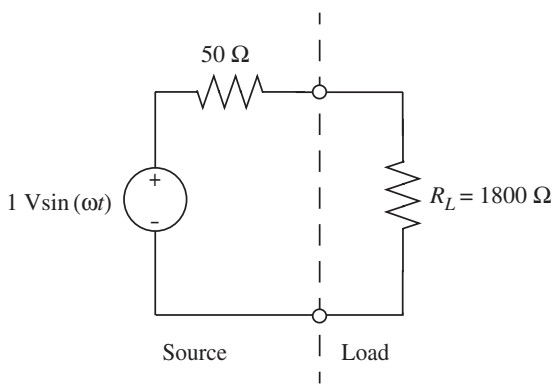


FIGURE 13.56 A source connected directly to a load.

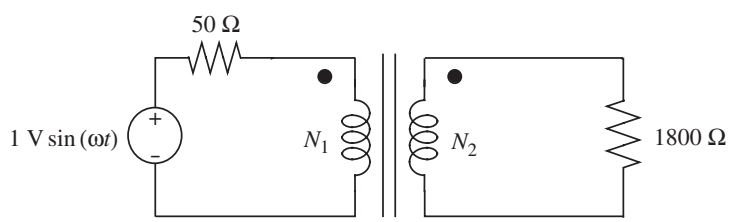


FIGURE 13.57 A source connected to a load through a transformer.

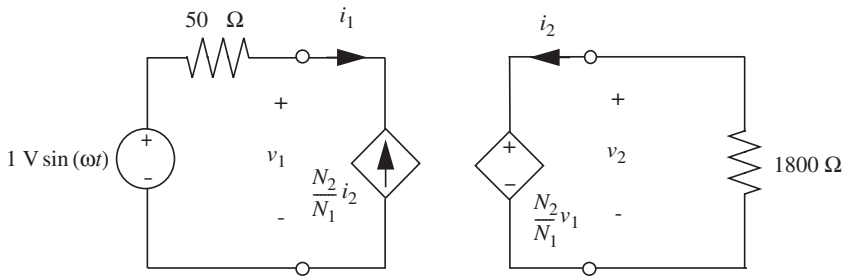


FIGURE 13.58 An equivalent circuit model of the circuit in Figure 13.57.

To analyze this new circuit, consider first the secondary side of the transformer. There,

$$i_2 = -\frac{N_2}{N_1}\frac{v_1}{R_L}, \tag{13.175}$$

and so at the primary side of the transformer,

$$i_1 = -\frac{N_2}{N_1} i_2 = \frac{N_2^2}{N_1^2}\frac{v_1}{R_L}. \tag{13.176}$$

Thus, as viewed from the primary side of the transformer, the transformer and resistor together behave as a resistor having resistance

$$(N_1/N_2)^2 R_L.$$

In other words, the transformer has transformed the resistance of the load resistor by the ratio of $(N_1/N_2)^2$. It is straightforward to show that any secondary-side impedance is transformed to the primary side by the same ratio. Similarly, a primary-side impedance is transformed to the secondary side by a ratio of $(N_2/N_1)^2$.

Let us now determine the ratio $N_2/N_1$ that maximizes the power delivered to the load. To do so, we use the circuit in Figure 13.59, in which the transformer and load resistor

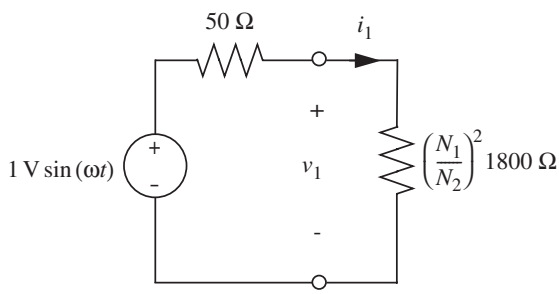


FIGURE 13.59 An equivalent circuit model with the transformer and load resistor replaced by the effective load resistor.

are replaced by the effective load resistor having resistance $(N_1/N_2)^2$ 1800 Ω. In this case, the voltage across the effective load resistor is

$$\frac{1800N_1^2/N_2^2}{50 + 1800N_1^2/N_2^2}\ 1\ \text{V}\ \sin(\omega t),$$

and the average power delivered to the effective load resistor is

$$0.5\ \frac{1800N_1^2/N_2^2}{(50 + 1800N_1^2/N_2^2)^2}\ \text{W}.$$

Since the power into the primary side of an ideal transformer instantaneously exits the secondary side of the transformer, this is the power delivered to the actual load. This power is maximized for

$$50 = 1800N_1^2/N_2^2,$$

or $N_2/N_1 = 6$, in which case the resistance of the effective load resistor is 50 Ω, and the power delivered to the load resistor is 2.5 mW.

Thus, to achieve maximum power transfer, the resistance of the load must match that of the source, and the ideal transformer performs this matching.