CHAPTER 3

# Subsea Distribution System

## Contents


3.1. Introduction 64
3.1.1. System Architecture 64
3.2. Design Parameters 66
3.2.1. Hydraulic System 66
3.2.2. Electrical Power System and Communication 66
3.3. SDS Component Design Requirements 67
3.3.1. Topside Umbilical Termination Assembly (TUTA) 67
3.3.2. Subsea Umbilical Termination Assembly (SUTA) 68
3.3.3. Umbilical Termination Head (UTH) 70
3.3.4. Subsea Distribution Assembly (SDA) 71
*3.3.4.1. Construction 72*
*3.3.4.2. Interface with the Umbilical 72*
*3.3.4.3. Interface with SCM 72*
*3.3.4.4. Electrical Distribution 72*
*3.3.4.5. Hydraulic and Chemical Distribution 73*
*3.3.4.6. ROV Connection 74*
3.3.5. Hydraulic Distribution Manifold/Module (HDM) 74
3.3.6. Electrical Distribution Manifold/Module (EDM) 76
3.3.7. Multiple Quick Connects (MQCs) 77
3.3.8. Hydraulic Flying Leads and Couplers 78
*3.3.8.1. Construction 79*
*3.3.8.2. Connection Plates 79*
*3.3.8.3. Installation 80*
*3.3.8.4. Hydraulic Couplers 81*
3.3.9. Electrical Flying Leads and Connectors 84
*3.3.9.1. Manufacturing 84*
*3.3.9.2. Construction 84*
*3.3.9.3. Installation 85*
*3.3.9.4. Electrical Connectors 86*
3.3.10. Logic Caps 86
3.3.11. Subsea Accumulator Module (SAM) 88
*3.3.11.1. Description 88*
*3.3.11.2. Components 89*
References 90



*Subsea Engineering Handbook*
ISBN 978-1-85617-689-7, doi:10.1016/B978-1-85617-689-7.10003-2

## 3.1. INTRODUCTION

A subsea distribution system (SDS) consists of a group of products such as umbilical and other in-line structures that provide communication from subsea controls to topside. This chapter describes the main components of the SDS currently used in subsea oil/gas production, and defines its design and the functional requirements of the system.

The type of system to be discussed in this chapter should be designed to perform the following functions:

- Hydraulic power distribution;
- Chemical injection distribution;
- Electrical power distribution;
- Communication distribution.

### 3.1.1. System Architecture

The SDS normally includes, but is not limited to, the following major components:

- Topside umbilical termination assembly;
- Subsea accumulator module;
- Subsea umbilical termination assembly, which includes:
  - Umbilical termination head (UTH);
  - Hydraulic distribution module;
  - Electrical distribution module;
  - Flying leads.
- Subsea distribution assembly;
- Hydraulic flying leads;
- Electrical flying leads;
- Multiple quick connects;
- Hydraulic coupler;
- Electrical connector;
- Logic caps.

Figure 3-1 illustrates the relationships of the main structures.

The subsea umbilical termination assembly mainly consists of inboard multiple quick connect (MQC) plates, mounting steel structures, a lifting device, mudmat, logic cap, long-term cover, field assembled cable termination, and electrical connectors.

The subsea distribution assembly mainly consists of a hydraulic distribution module (HDM) and electrical distribution module (EDM). The HDM consists of inboard MQC plates, mounting steel structures, lifting

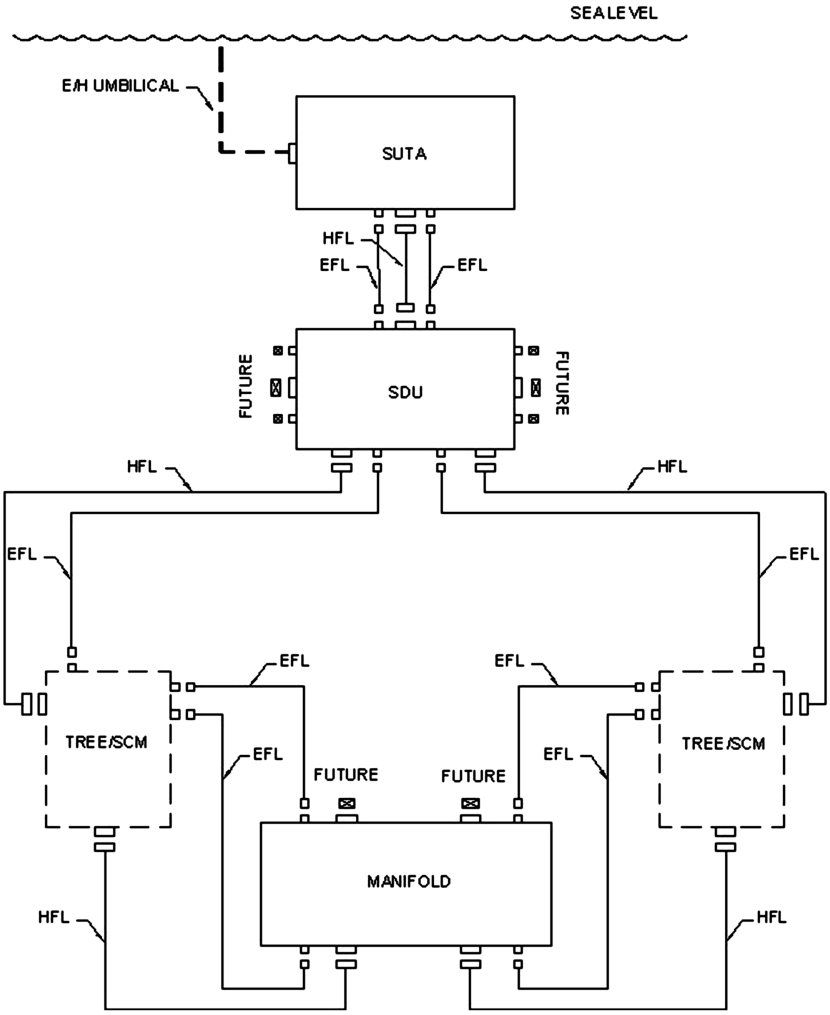


**Figure 3-1** Subsea Distribution System Block Diagram

padeyes, a mudmat, logic cap, and long-term cover. The EDM consists of bulkhead electrical connectors and cables and, in some cases, an electrical transformer module.

Hydraulic flying leads (HFLs) mainly consist of two outboard MQC plates with holding structures and steel tubes. Electrical flying leads (EFLs) is mainly consist of two electrical connectors and a number of cables.

## 3.2. DESIGN PARAMETERS

### 3.2.1. Hydraulic System

The following main parameters need to be determined for the hydraulic system:

- Reservoir sizing;
- The time to prime the hydraulic system from a depressurized state;
- Opening and closing response times of the process valves under conditions of minimum and maximum process pressure;
- The time for the pressure to recover following a process valve opening;
- The time to carry out a sequence of valve openings, such as the opening of a tree (neglecting choke valve operation);
- The stability of opened control and process valves to pressure transients, caused by operation of the other control and process valves (sympathetic control valve de-latching, process valve partial closing, etc.);
- Response time to close process valves in the event of a common close command, such as an emergency shutdown at the surface, venting off hydraulic control valves via supply lines;
- The time to vent the umbilical hydraulic supplies;
- The impact that failure of subsea accumulation has on the safe operation and closure of the process valves;
- The extent of control fluid leakage rate that can be accommodated by the system;
- System response times for simultaneously opening and closing multiple choke valves.

### 3.2.2. Electrical Power System and Communication

The following main parameters need to be determined by means of a system power demand analysis:

- Voltage at subsea electronic module (SEM) for maximum and minimum SEM power loads;
- Voltages at each SEM at maximum and minimum numbers of subsea control modules (SCMs) on the subsea electrical distribution line;
- Voltages at SEM at minimum and maximum designed umbilical lengths;
- Voltages at SEM at cable parameters for dry and wet umbilical insulations;
- Minimum and maximum subsea power requirements;
- Maximum current load;
- Topsides electrical power unit power factor versus SCM voltage.

A communication analysis is conducted to determine the minimum specifications of SCM and master control station (MCS) modems:

- Modem transmit level;
- Modem receive sensitivity;
- Modem source/load impedance.

## 3.3. SDS COMPONENT DESIGN REQUIREMENTS

### 3.3.1. Topside Umbilical Termination Assembly (TUTA)

The TUTA as shown in Figure 3-2 provides the interface between the topside control equipment and the main umbilical system. This fully enclosed unit incorporates electrical junction boxes for the electrical power and communication cables, as well as tube work, gauges, and block and bleed valves for the appropriate hydraulic and chemical supplies.

The TUTA will typically be located near the umbilical J-tube on the host. Basically, it includes an electrical enclosure in a lockable stainless

**Figure 3-2** Topside Umbilical Termination Assembly (TUTA) [1]

steel cabinet certified for its area of classification with ingress protection to fit its location. Additionally the valves in the TUTA comply with requirements for valves in flammable services as stated on fire testing standards.

The termination unit at the topside end of the umbilical is designed for hang-off and includes a bull-nose suitable for pulling the umbilical up through the host guide tube onto a termination support. For a free-flooded umbilical, it is sufficient to seal off the individual ends of the conductors and tubes and use an open bull-nose.

Tubes must be individually sealed to prevent hydraulic oil loss and water ingress during the pulling operations. Electrical conductors must be sealed to prevent water ingress along the insulation.

If the umbilical is intended for temporary laydown, pressure relief during retrieval is considered.

Basically, the J-tube seals can withstand a 100-year maximum wave and maintain its differential pressure capability during service life. Free span corrections between the J-tube bell mouth and seabed are also be designed according to the project's specific design basis.

### 3.3.2. Subsea Umbilical Termination Assembly (SUTA)

The SUTA shown in Figure 3-3 is the subsea interface for the umbilical and may serve as the distribution center for the hydraulic and chemical services at the seabed. The SUTA is connected to the subsea trees via HFLs.

SUTA is typically composed of the following:

- UTH;
- Flying leads to connect the UTH and HDM;
- HDM if available;
- Mudmat foundation assembly with stab and hinge-over mechanism;
- MQC plates to connect to HFLs.

The type of SUTA to be used is determined by field architecture considerations, and is further defined during detailed design.

The SUTA is designed with the following flexibilities:

- Provision for possible links to additional umbilicals;
- Provision for spare header included in case of internal piping failure;
- Demonstration of design that allows flexible installation;
- Retrievability and reconfiguration options;
- Redirection of any umbilical line to any tree service via flying leads.

SUTAs are installable with or without drilling rig assistance. The mudmat includes attachment points for adjusting the subsea position, with application

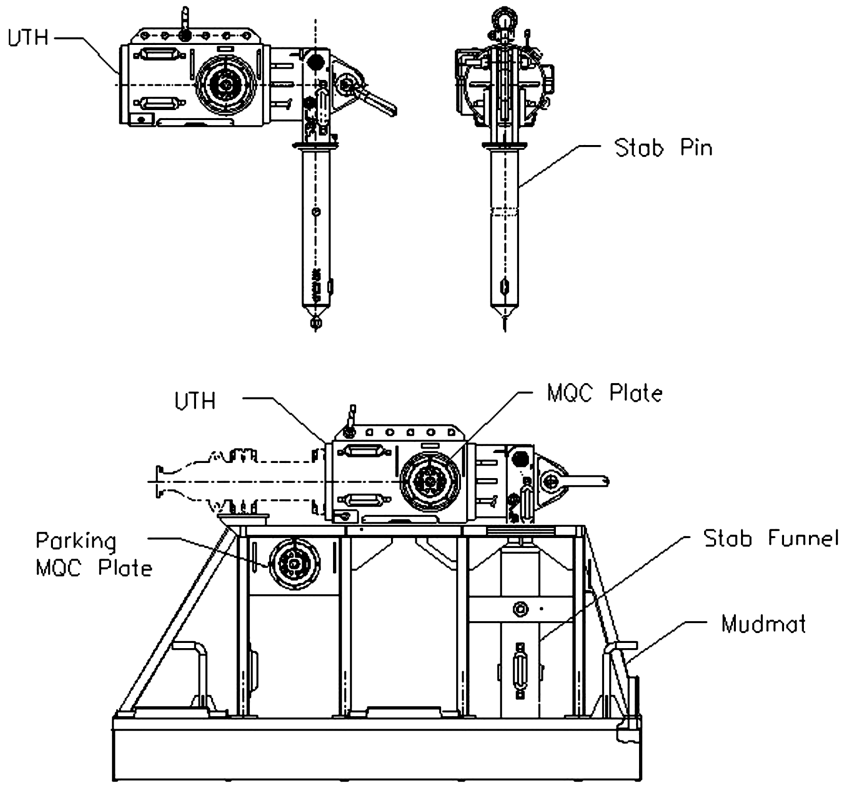


**Figure 3-3** Stab and Hinge-Over SUTA

of external horizontal forces, when direct vertical access for installation is not possible.

A SUTA's dimensions allow for ground transportation from the fabrication facility to the final destination.

The umbilical is permanently terminated in the UTH.

The infield first end SUTA is a smaller unit, its purpose is to link the electrical of hydraulic/chemical lines.

HFLs are used to connect hydraulic/chemical lines between SUTAs and subsea trees/manifolds.

EFLs are used to connect electrical power/communication from the umbilical termination assembly (UTA) to the manifold and tree-mounted SCM.

The UTH, HDM, and EDMs are each independently retrievable from the UTA's mudmat.

Each of the electrical quads (umbilical cables with four conductors) is terminated in electrical connectors at the UTH.

The EFL interconnects between these UTH connectors and the EDM connectors, routing power and communication from the UTH to the EDM. Subsea electrical distribution is done from the EDM to the subsea trees and production manifolds.

Two flying leads provide the hydraulic/chemical interconnections between the UTH and the HDM.

### 3.3.3. Umbilical Termination Head (UTH)

The UTH, shown in Figure 3-4, consists of a structural frame, hinging stab, MQC plates, super-duplex tubing, and bulkhead style ROV electrical connectors. Umbilical services are routed to the MQC plates and electrical connectors for distribution to subsea production equipment.

The SUTA terminates the hydraulic subsea umbilical and provides a flange connection to attach the umbilical termination. The umbilical is composed of super-duplex tubes.

All tubing in the UTH and HDM is welded to the hydraulic couplers located within the MQC plates. The number of welded connections between the couplers and the tubing is kept at a minimum. Butt-weld joints are preferred over socket-welded connections. The design allows for full opening through the tubing and the welded area. The design also avoids any area where crevice corrosion may occur.

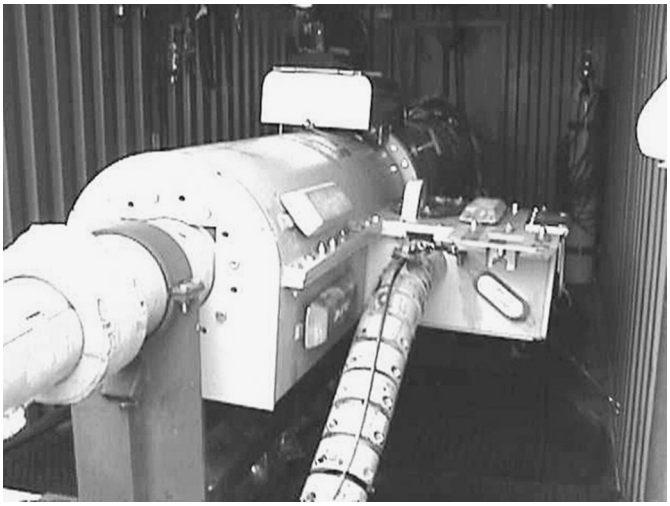

**Figure 3-4** Umbilical Termination Head (UTH) [2]

The termination flange connection between the SUTA and the umbilical is designed to accomplish the following condition:

- Because the SUTA is installed with its stab and hinge-over stinger, the flange is capable of supporting the weight of the SUTA as well as all installation loads.
- After installation, the SUTA may need to be lifted from its mudmat and stab and hinge-over funnel. As the SUTA is lifted and brought back to the surface, the flange is capable of supporting the "unsupported" umbilical weight with a 50% safety factor.

The UTH at minimum complies with the following requirements:

- At minimum, the UTH is designed to allow termination of a minimum of nine umbilical steel tube lines and two electrical quads.
- The structural frame is designed to securely attach to and support the umbilical and end termination as well as provide mounting locations for the MQC plates and bulkhead electrical connectors.
- The hinging stab is attached to the frame and is the interface between the UTH and mudmat structure.
- The UTH frame size is minimized in order to simplify handling and overboarding.
- The UTH are kept small to fit inside most umbilical overboarding chutes, and can be maneuvered through most vessel umbilical handling systems.
- The recovery padeyes are designed to take the full recovery load of the UTH and the umbilical.
- The UTH, combined with the umbilical split barrel (supplied by the umbilical manufacturer), is designed to sit on the umbilical reel of an installation vessel at the end and/or at the beginning of the umbilical.
- Tubing connections and other possible points of failure are reduced as much as possible in the UTH to avoid having to retrieve the umbilical to repair a failed component.

### 3.3.4. Subsea Distribution Assembly (SDA)

The SDA, as shown in Figure 3-5, distributes hydraulic supplies, electrical power supplies, signals, and injection chemicals to the subsea facilities. The facilities can be a subsea template, a satellite well cluster, or a distribution to satellite wells. The SDA connects to the subsea umbilical through the SUTA.

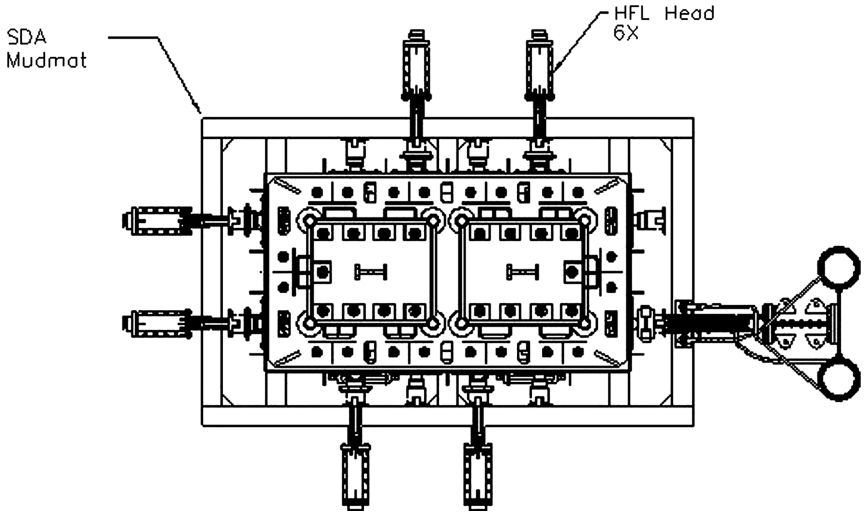


**Figure 3-5** Subsea Distribution Assembly

#### *3.3.4.1. Construction*

The SDA frame is fabricated from carbon steel coated in accordance with a subsea paint specification. The frame is designed for lifting and lowering onto a location on a subsea production structure. Alternatively, the SDA can be located on a mudmat, simple protective frame, or monopile.

#### *3.3.4.2. Interface with the Umbilical*

The SUTU can connect to the SDA with a vertical/horizontal stab and hinge-over/clamp connection. Alternatively, it can connect via electrical and hydraulic jumpers at a seabed level pull-in location or manifold structure pull-in location using an ROV or diver connectors. If the field layout demands, the jumpers can route through a weak link breakaway connector.

#### *3.3.4.3. Interface with SCM*

The jumpers from the SDA to the subsea accumulator module mounting base (SCMMB) are connected using an ROV.

#### *3.3.4.4. Electrical Distribution*

The electrical distribution is usually contained in an oil-filled, pressure-balanced, fabricated and coated carbon steel housing called an electrical distribution unit (EDU). (Non–pressure-balanced, resin-filled junction boxes are sometimes used, but these do not allow future maintenance and

require the encapsulated components to be suitable for use at depth; designs requiring current-limiting devices may be housed in a one-atmosphere enclosure.) Entry and exit of the EDU is by flange-mounted electrical controlled environment-type connectors.

The connectors are configured so that any connections that may be accidentally disconnected live have the live conductors protected from the seawater.

Cable tails from the back of the electrical connectors within the oil-filled housing are connected for distribution as required by the control system architecture and the system redundancy capability.

The requirement for fault protection is dependent on the system design and the number of wells that could potentially be disabled by a subsea cable fault. Three types of electrical protection are used: fuses, circuit breakers, and thermal resetting trip devices.

Fuses are not effective, as slow-blow fuses are necessary in order to cater to the inrushing current while charging up the umbilical. This makes fuses ineffective in isolating a fault in the distribution system without overloading the remainder of distribution outlets and, generally, a fuse would not blow before the line insulation fault trip in the EPU is activated.

Circuit breakers have been used subsea in EDUs, but are not commonly used because the circuit breaker reset mechanism has to penetrate through the EDU housing using O-rings, which introduces a potential fault path.

The thermal resetting devices are semiconductor devices and due to the technology required, they are not available from all suppliers.

#### *3.3.4.5. Hydraulic and Chemical Distribution*

The hydraulic distribution is by tubing from the incoming interface connection routed around the structure to the distribution outlets. The stab connections and the tubing are generally made of type 316 stainless steel. The tubing terminations are all welded for integrity. The tubing, which is usually installed at a fabrication site, has to be flushed and cleaned to the integrity required by the subsea control system.

Chemical injection systems generally require larger volume flows during normal operation, and are also subject to increased viscosity at lower seabed temperatures. Therefore, larger bore tubing or piping is generally used, again welded to maintain integrity.

Multiple stab plate hydraulic connections must have some movement in order to allow for alignment during makeup. Also tubing is often installed

on structures using clamps with plastic inserts. This can leave the tubing and end connections floating without cathodic protection. It is essential that these items be electrically bonded to the main structure cathodic protection system to avoid rapid corrosion of the system.

Other material that may be considered for the distribution piping or tubing is carbon steel for the chemical injection system, or more exotic materials such as Duplex or Super Duplex stainless steel.

To ensure correct mating of the respective parts, guide pins are used on stab plates, and single connections may have different size quick-connect couplings or may be keyed for proper orientation.

#### *3.3.4.6. ROV Connection*

The access of an ROV to the SDU has to be carefully considered. It is not necessary to have a docking station for ROV makeup, but docking may make certain tasks easier. If the field survey shows strong currents at the seabed and changeable directions, then ROV docking is necessary.

With multiwell applications where the ROV must remove connectors from parking positions and hook up at positions on the SDU, it is essential that the ROV does not get entangled in any of the other flying leads. This can cause damage to the flying leads or may entangle the ROV where it would need to cut flying leads in order to free itself.

Clear marking of the connection point is essential to ensure that the ROV pilot can orient the ROV at the desired location and to ensure that the correct hookup in low-visibility subsea.

### 3.3.5. Hydraulic Distribution Manifold/Module (HDM)

The purpose of the HDM is to distribute hydraulic fluid (LP and HP) and chemicals to each of the subsea trees, production manifolds, and to future expansions. The HDM as shown in Figure 3-6 consists of multiple inboard MQC plates on a frame that is mounted on an umbilical termination assembly mudmat (UTA-MM).

The hydraulic distribution depends on:

- The number of valve functions;
- The actuator sizes;
- The frequency of valve operation while operating the system;
- The location of the valves, trees, and manifolds.

Stored hydraulic energy in accumulator bottles (SAM) is required to allow fast sequential opening of subsea valves without affecting the operation

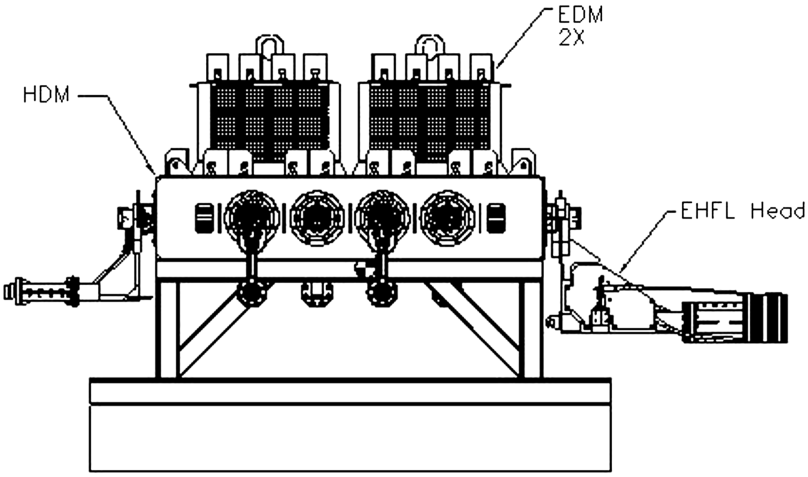


**Figure 3-6** Hydraulic Distribution Unit (EDM and HDM)

of other valves in the system. The accumulators are charged up by the hydraulic supply in the umbilical.

The HDM allows for the reconfiguration of services by changing logic caps during the service life.

Each HDM has a spare line going to all inboard MQC plates to allow the umbilical services to be reconfigured in case of an umbilical line failure or a change in the operability and/or chemical requirements of the existing field or an expansion location.

ROV valves are being used where desired functionality or isolation cannot be achieved by a logic cap. A spare manifold is included in the HDM to provide flexibility for reconfigurations.

The minimum component test pressure is 50% above design pressure.

Basically, all parts and components of the subsea distribution system are clean before and during assembly.

The subsea hydraulic system is robust and designed to tolerate accidental contamination by seawater and particles. It should be designed to avoid accumulation of such contamination. All components are qualified for operation in fluid contaminated with solid particles. Vulnerable parts with very low fluid consumption (e.g., directional control valve pilot stages) should be protected by filters. Otherwise strainers should be used. A logic/crossover cap is used to reconfigure spare umbilical line to replace failed line.

### 3.3.6. Electrical Distribution Manifold/Module (EDM)

The number of electrical connectors in series is kept to a minimum. Redundant routing to the module connectors should follow different paths if possible.

The cables should be installed into self-pressure compensated fluid-filled hoses. The fluid is a dielectric type. Dual barriers are provided between water and the conductor. Both barriers should each be designed for operation in seawater.

Manifold electrical distribution cabling and jumper cables from umbilical termination to the subsea control module (SCM) can be replaced by an ROV. Removal of the faulty cable is not necessary.

In the case of a failure in the distribution system, it should be possible to run several SEMs on one pair after using an ROV for reconfiguration.

If one electrical line is supplying more than two SEMs, the distribution and isolation units can be located in a separate, retrievable distribution module.

Connection of electrical distribution cabling and electrical jumpers is made by an ROV using simple tools, with minimum implications for rig/vessel time.

The cable assemblies should be designed and installed such that any seawater entering the oil will move away from the end terminations by gravity.

The EDM is configured with the following in mind:

- Each UTA is configured with a single EDM.
- The EDM is capable of distributing the electrical and communication services of two umbilical quads from a UTH to the multiple subsea assemblies.
- There are four electrical parking positions for parking of the flying lead end of the distribution harness during installation and retrieval, each protected long term by an ROV universal protection cap.
- No other electrical parking positions are provided on the EDM. Additional parking provisions will be provided by the deployment of a separate parking frame assembly if required.
- There are eight electrical output connectors (receptacles), each protected long term with an ROV universal protection cap.
- The EDM consists of oil-filled electrical splitter harnesses mounted within a retrievable structure. The splitter harness multiple outputs are terminated in bulkhead-mounted ROV electrical plug connectors with socket contacts.

- At the input end, which connects to the UTH, the single leg of the harness is terminated with an ROV-mateable plug connector with socket contacts.
- The EDM interfaces with the tree/manifold supply EFLs and step-out EFLs to the static umbilicals, as shown earlier in Figure 3-6.
- Power and communication are provided from a female electrical connector to a male connector.

### 3.3.7. Multiple Quick Connects (MQCs)

The MQC plates are outfitted with the appropriate number of couplers to match the number of tubes in the hydraulic flying leads. Any unused positions in the MQC plate are outfitted with blanked-off couplers. All tubes and coupling assignments need to match the tree assignments. Figure 3-7 shows an MQC assembly.

All couplers are energized, and the MQC is capable of withstanding full coupler pressures (design pressure and test pressure). The design of couplers is considered to have the potential for external leakage due to external pressure being greater than internal pressure.

MQC plates are located within the SUTA envelope/tree/manifold side, for example, and are protected from any damage during installation. The location and arrangement of the MQC plates is ROV friendly and allow for connection and disconnection of any MQC connection without disturbing the others.

MQC plates are supplied with pressure-retaining protective covers. These may be required to remain subsea for extended periods of time and to be removable by an ROV, prior to installation of flying leads.

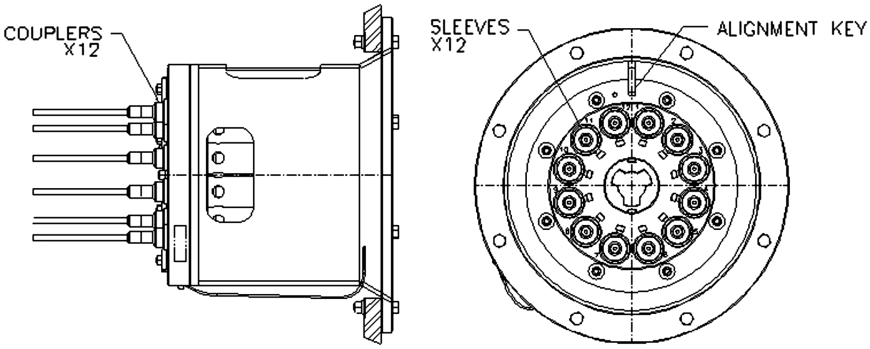


**Figure 3-7** MQC Assembly

MQC plates have ROV-operable attachment means in order to connect to the flying leads. All standard and special ROV tools required for this connection must be specified. Besides it is also required to specify the following ROV makeup and disengage torque requirements:

- Starting torque;
- Running torque;
- Maximum torque required to engage fully energized couplers;
- Minimum torque required to disengage the couplers or break-out torque with and without internal pressure at the subsea ambient condition;
- Maximum torque required to engage the override mechanism.

The MQC designs provide means for the ROV to verify the orientation and alignment of the outboard plate, prior to insertion into the inboard MQC plate.

The necessary tools to release the outboard plate from the inboard plate in the event the plates cannot be separated by the ROV should be well equipped. MQC plates are outfitted with an emergency release device. The design also prevents the MQC plates from engaging if they are not aligned properly. The couplers are not engaged prior to proper inboard plate alignment. For interface information purposes, all data for the acceptable angular, axial, and radial misalignment tolerance to ROVs must be recorded.

The designs allow for the full guidance of the attachment mechanism and avoid any possibility of thread engagement. The design also allows for the verification of the alignment and engagement of the threads.

MQC plates have identification numbers that are visible for ROV inspection.

MQC plates have windows for ROV inspection. These windows will be used for inspecting full engagement of the MQC plates as a means to verify that installation was properly made, and to inspect for leaks during operation.

### 3.3.8. Hydraulic Flying Leads and Couplers

The hydraulic flying leads deliver hydraulic and chemical services from the SUTA to the tree or from the SDA to the tree, as shown in Figure 3-8.

The HFLs are made up of three main components: the tubing bundle, the steel bracket assembly heads, and the MQCs. The bundle is terminated at both ends with an MQC plate, which is used to connect the HFL to the trees, or the UTA. These assemblies have padeyes for handling and deployment purposes.

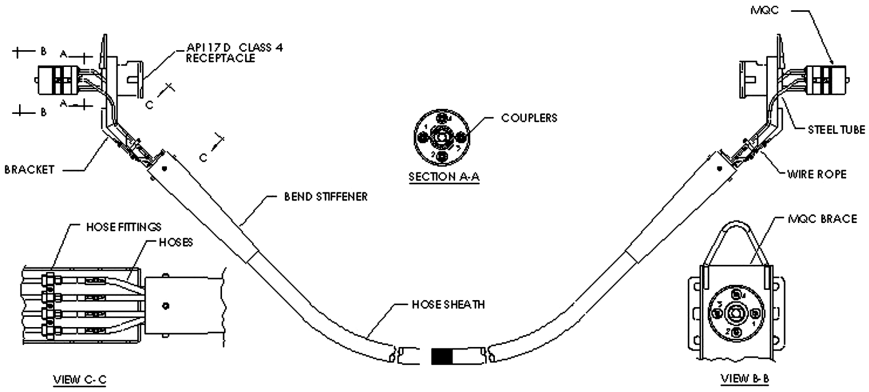


**Figure 3-8** HFL Assembly

### *3.3.8.1. Construction*

Tubes are bundled and jacketed for protection and to prevent kinks in the tubes.

End terminations from the tubes to the MQC assemblies and to the couplers are welded and NDE (None Destructive Examination) examined. Termination assemblies are structurally sound and capable of withstanding all transportation, installation, and operation loads.

### *3.3.8.2. Connection Plates*

The hydraulic flying leads are supplied with MQC plates designed for a number of couplers. All tubes and coupling assignments need to match UTA and tree assignments.

All couplers and the HFL are capable of withstanding full design pressure and test pressure. The design takes into consideration the fact that all couplers will be energized to a full test pressure of 1.5× design pressure during a FAT (Fabrication Assemble Testing) proof test.

Design of all MQCs and couplers also considers the potential for leakage due to the external pressure being higher than the internal pressure.

All seals are compatible with the chemicals, methanol, and hydraulic control fluid used.

Hydraulic couplers are leak free in the unmated condition with high pressure of full working pressure or low pressure of 1 psi.

MQC plates on the HFL have ROV-operable attachment means in order to connect to the inboard MQC plates at the UTAs, trees, and manifold. Makeup at depth must be achieved with all positions pressurized or only one side pressurized. Breakout at depth must be achieved with no positions

pressurized. No special tooling is required for installation or removal of the terminations.

Hydraulic couplings must be qualified for the duty and be capable of mating and unmating at worst case angles after coarse alignment, without failure. The MQC must be capable of mating and unmating 50 times on land and 30 times at design water depth without seal replacement and without leakage when made up and subjected to internal pressures between 0 psi and the system working pressure, and maximum hydrostatic pressure.

The following potential misalignments should be considered in MQC design:

- Linear misalignments: 1.5 in. in each direction;
- Axial misalignment between male and female connector limited to 3 degrees;
- Rotational misalignment limited to 5 degrees.

MQC plates are outfitted with an emergency release device. The design also prevents the MQC plates from engaging if they are not aligned properly. The couplers are not engaged prior to proper alignment. The emergency release mechanism makes provision for the separating forces necessary at depth.

MQC plates are visible for ROV inspection. This visibility must be capable of indicating full engagement of the MQC plates and means to verify that installation was properly made. It must be possible to inspect for leaks during operation.

#### *3.3.8.3. Installation*

All circuit paths in the HFL are proof tested to 1.5× maximum design pressure.

HFLs are visible to the ROV at the design water depth and in installed configurations.

HFL assembly design incorporates the means for offshore deployment. The design also incorporates the capability for HFLs to be lifted and installed by ROVs subsea. Maximum weights in air and water (for empty and filled tubing) and any buoyancy/flotation requirements must be defined.

Methods for handling, installation, and retrieval and for providing any necessary permanent flotation must be specified. Offshore test/verification procedures and long-term storage procedures must be provided. All assembly drawings, list of materials, and interface drawings to ROV operation and installation must be provided.

HFLs are outfitted with ROV API-17F Class 4 buckets or as referenced in ISO 13628-8 [3] for handling purposes.

The type of fluid that is required inside the HFL during shipping and deployment must be defined. Storage fluids must be compatible with chemicals and hydraulic fluid. HFLs are outfitted with MQC protection caps during shipping.

The maximum allowable pull on a termination and the minimum bend radius for assembled HFLs must be specified.

HFLs have clear permanent markings visible to an ROV during design life at service subsea.

#### *3.3.8.4. Hydraulic Couplers*

The hydraulic couplers for deepwater applications need a spring strong enough to seal against the external pressure head in order to prevent seawater from contaminating the hydraulic fluid, and need to be designed such that only a low-pressure force is required for makeup. Figure 3-9 and Figure 3-10 illustrate female and male hydraulic coupler structures, respectively.

Couplings are available that require a low force for makeup, and these are available with dual redundant resilient seals and with a combination of resilient and metal seals.

For deepwater applications a fully pressure-balanced coupling is preferable. These are fairly new concepts, but are available in single coupler pair design and also the four coupler hydraulic circuits design. The single pair is a resilient seal with a porting design that allows for inherent pressure balancing across the poppets, which provides pressure assistance to the spring closure force when the coupling is disconnected. The design uses a combined metal and resilient seal arrangement acting in a shear seal arrangement as the coupler mates and disconnects.

Both designs use the principle that the flow path is radial and hence produces no resultant separation force.

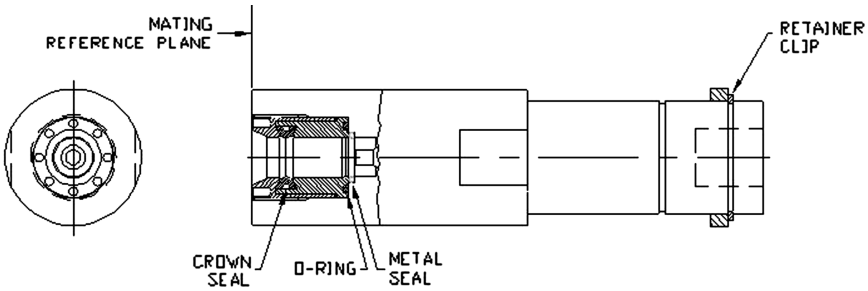


**Figure 3-9** Female Hydraulic Coupler

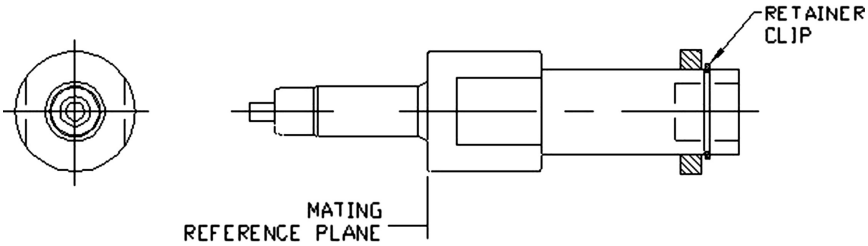


**Figure 3-10** Male Hydraulic Coupler

It is important for hydraulic couplers to have adequate flow paths to ensure that adequate hydraulic response times are achievable. The poppets are balanced to prevent them being driven hydraulically from the central open position and sealing against one of the seal faces.

The female couplers are usually assembled into a hydraulic jumper stab plate so that they can be retrieved and the seals replaced if necessary. The female couplers are assembled so that they are floating on the plate to allow for any manufacturing tolerances.

The backs of the connectors have to be terminated by screw-on hose termination couplers or by screw seal or welded assemblies for the termination of steel tubing.

Joint Industry Conference (JIC) hose terminations, which swage inside the central core tube of a standard thermoplastic hose, can only be used when the hose can be maintained full of fluid of a specific gravity equal to or similar to the specific gravity of seawater. This is to prevent collapse of the hose in deepwater applications.

Alternatively, high collapse resistance (HCR) hose with a spiral flexible metal former under the core tube must be used. The flexible inner core is designed to withstand the external seawater pressure and to prevent the hose core from collapsing. The HCR hose requires a different type of coupling that has a welded construction. The metal former inside the coupler slides inside the spiral hose support and seals by swaging onto the outside of the thermoplastic liner.

When stab plates are densely populated, it can be difficult to turn and orient all of the hoses through 90 degrees and into the hose/cable restraint. Right-angled connectors are used to orient the hoses into the clamp. It may also be necessary to have these connectors of stepped heights in order to allow hose makeup and to avoid tight bends or kinking of the hoses.

Hydraulic couplers have the following basic requirements:

- Hydraulic couplers at the very minimum meet all requirements as stated in the latest revision of ISO 13628-4 [4] and ISO 13628-6 [3].
- This functional specification covers all different types of hydraulic couplers, which includes, but is not limited to, (1) a coupler with poppet, (2) a coupler without poppet, (3) a male blank coupler, and (4) a female blank coupler.
- The couplers include inboard and outboard MQC plates that provide the mechanism for mating, demating, and locking multiple coupler connections within a single assembly.
- The hydraulic coupler system is configured to ensure that the replaceable seals are located in the hydraulic flying leads.
- Design of the hydraulic system should consider water hammer, high-pressure pulses, and vibration on couplers. This includes external sources, for example, chokes.
- Where high cyclic loads are identified, the design and manufacturing should be reviewed to mitigate associated risks, for example, the use of butt-weld hydraulic connections.
- The designs minimize ingress of external fluid during running and makeup operation.
- The couplers are designed for reliable and repeatable subsea wet mating under turbid environmental conditions.
- The couplers have a minimum of two seal barriers to the environment unless the barrier is seal welded.
- All chemical and hydraulic circuits within the same component are rated to the same design pressure.
- All hydraulic and chemical tubing circuits are NAS 1638-64 Class 6 [5] (or equivalent ISO 4406 Code 15/12) [6].
- The couplers are designed for operation and sealing under the maximum torque and bending moment applied to mated couplers through MQC engagement and misalignment.
- The couplers have metal-to-metal seals with elastomeric backup seals. Elastomeric seals must be compatible with the operating fluid.
- Couplers are furnished with necessary protection equipment in order to protect the equipment when being unmated and in-service and to prevent calcareous buildup and marine growth.
- Poppet couplers are to be used on all hydraulic and low-flow chemical services.

- Poppetless couplers are to be used on full-bore and high-flow chemical injection lines to reduce pressure losses and eliminate trash buildup through the poppet area (i.e., methanol supply and annulus vent lines).
- Spare umbilical tubes have poppet couplers.
- Consideration must be given to the ability to bleed trapped pressure in poppet circuits when recovered to surface (i.e., residual operation pressure or head pressure once disconnected from system).
- Special consideration is given to scale buildup prior to connection.

## 3.3.9. Electrical Flying Leads and Connectors

The EFL connects the EDU to the SCM on the tree. Each SCM utilizes two independent EFLs from the EDU for the redundant power on communication circuits, as shown in Figure 3-11.

### *3.3.9.1. Manufacturing*

The EFL assembly is composed of one pair of electrical wires enclosed in a thermoplastic hose, fitted at both ends with soldered electrical connectors. The assembly constitutes an oil–filled, pressure-compensated enclosure for all wires and their connections to ROV-mateable connectors.

### *3.3.9.2. Construction*

Wires are continuous and are, at a minimum, of 16 AWG. A twisted-pair configuration is recommended.

Voltage and current ratings for the wires are sized to not significantly degrade overall circuit performance based on the results from the electrical analysis.

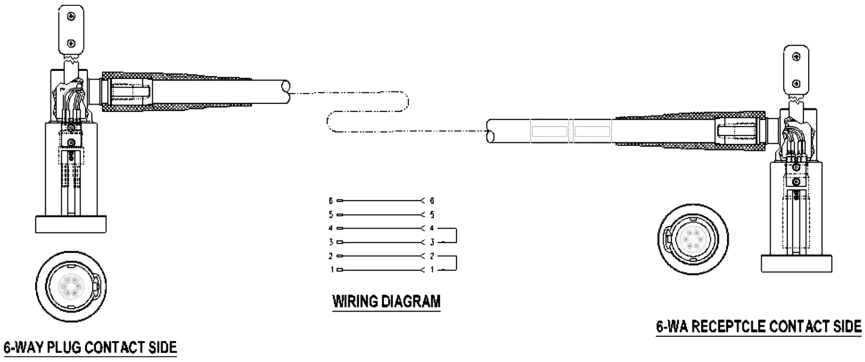


**Figure 3-11** EFL Assembly

Wires are soldered to the connector pins and protected by boot seals of compatible material. Pin assignment matches the system requirements.

A hose with low collapse resistance, specifically selected for subsea use, with titanium or equivalent end fittings, connects both electrical connectors of the flying lead, to ensure compatibility of materials used.

The length of the wire within the hose is sized to allow for any stretching of the hose up to failure of the hose or the end fittings. Hose stretching does not allow for any pull load on the soldered connections.

Hoses are a continuous length with no splices or fittings for lengths under 300 ft (91m). Any use of splices or fittings is brought forward for approval on a case-by-case basis.

Hoses are filled with Dow Corning –200 dielectric fluids.

The compatibility of the hoses, boot seals, and wire insulation with the compensating fluid and seawater is confirmed.

The wire insulation is a single-pass extrusion and suitable for direct exposure to seawater.

All wires are100 % tested for voids and pinholes by immersion in water hipot.

Connectors are marked appropriately to simplify ROV operations. An alignment key or other device is incorporated to ensure correct orientation.

The electrical connectors must be qualified for the duty and be capable of making and breaking at worst case angles, before and after course alignment, without failure. They must be capable of making and breaking 100 times under power on the female pin half without any sign of damage to pins or sockets and still remain capable of excluding seawater.

#### *3.3.9.3. Installation*

Connectors are provided with shipping protection covers.

All assemblies are identified with tags on both ends of the EFL. Tags must be designed such that they do not come off under severe handling onshore, offshore, and during installation and must be visible to ROVs at working water depth.

The color of the hose is visible to ROVs when in subsea use. Such colors include yellow or orange.

ROV handles and bottom plastic sleeves are color coded for ease of identification by the ROV underwater. These markings remain constant throughout the life of the project.

All EFL assemblies are filled with compensating fluid to a slight positive pressure (10 psi) prior to deployment.

Flying leads installed subsea are protected with mating connectors when not in use. These EFLs are temporarily located on parking positions on the E-UTA assembly, at the tree, or on a parking stand installed for that purpose.

#### *3.3.9.4. Electrical Connectors*

Electrical connectors have the following basic requirements:

- An electrical connector is a termination for electrical cables used to transmit electrical power of low voltage and communication signals between subsea production control system components.
- Electrical connectors at the very minimum meet all requirements as stated in the latest revision of ISO 13628-4 [4] and ISO 13628-6 [3].
- The number of electrical connectors in series is kept to a minimum. Redundant routing follows different paths. Consideration should be given to keeping voltage levels as low as practical in order to minimize electrical stresses on conductive connectors.
- Connectors are either Tronic or ODI.
- The electrical connector is capable of making wet mateable electrical connections utilizing an ROV. They are designed and constructed for normal and incidental loads imparted by ROVs during make-or-break operations.
- It is important to confirm the type of connector halves – whether it is "cable end" type or "bulkhead connector" type.
- The Christmas tree side has male (pin) connectors and the flying leads have female (socket) connectors.
- Connectors are configured to ensure that no male pins are powered up while exposed. Electrical distribution systems should be designed such that "live disconnect" is not required during normal maintenance or if possible during failure mode operation or recovery periods.
- Connectors are furnished with the necessary equipment to protect it from being unmated while in-service and to prevent calcareous buildup and marine growth.
- Optical connectors for any fiber-optic lines are fitted with long-term protective caps.

### 3.3.10. Logic Caps

Hydraulic and chemical distribution equipment includes dedicated MQC plates, known as logic caps (see Figure 3-12), which provide the ability to redirect services by replacing an outboard MQC plate with an ROV. Logic

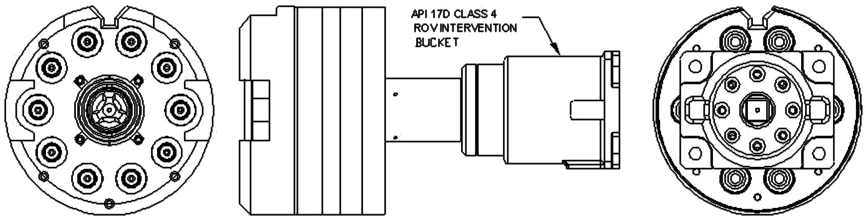


**Figure 3-12** Logic Cap Assembly

caps provide the flexibility to modify distribution of hydraulic or chemical services due to circuit failures or changes in system requirements.

The logic cap consists of stab plate mounted hydraulic couplers connected to HFL tubing and plumbed accordingly to suit the application.

Logic caps meet the following minimum requirements:

- They are always used for direct or manifold services in lieu of valves when possible.
- Designed for 15 years.
- Rated to maximum 5000 psi.
- Redundant LP supplies (e.g., LP1 and LP2) are in separate logic caps on separate sides of the frame, where possible.
- High-pressure (HP) supplies must be routed through a logic cap.
- Redundant HP supplies (e.g., HP 1 and HP2) also must be in separate logic caps on separate sides of the frame, and in the same logic cap with a corresponding low-pressure (LP) circuit (i.e., HP1 and LP 1 will be routed to same logic cap where possible).
- All chemical and annulus vent lines are distributed through a logic cap.
- Chemical tubes dedicated for step-out connections are not required to pass through logic caps.
- The logic cap configuration does not allow cross flow between trees.
- Logic caps are ROV installable and retrievable. Grab rails are provided to assist in ROV operations.
- All features conform to field wide standard designs in order to facilitate interchangeability and to minimize tooling.
- Logic cap utilization is based on the following priority list:
  - Hydraulic services;
  - Methanol (or other hydrate mitigation chemical) distribution;
  - Corrosion inhibitor (CI);
  - Asphaltene dispersant/inhibitor;
  - Other chemicals as defined by project team.

### 3.3.11. Subsea Accumulator Module (SAM)

The SAM, illustrated in Figure 3-13, is the subsea unit that stores hydraulic fluid such that adequate pressure is always available to the subsea system even when other valves are being operated.

SAM is used to improve the hydraulic performance of the subsea control system in trees and manifolds. Basically, it will improve hydraulic valve actuation response time and system hydraulic recovery time, at minimum system supply pressures.

#### *3.3.11.1. Description*

When a subsea system is required to operate a number of trees located a long distance away from the host, the hydraulic fluid from the topsides HPU will take a considerable time to reach the subsea equipment, particularly where small hoses are used in the umbilical. This can result in a drop in pressure at the subsea tree when a valve is opened, as the pressure cannot then be restored immediately via the umbilical.

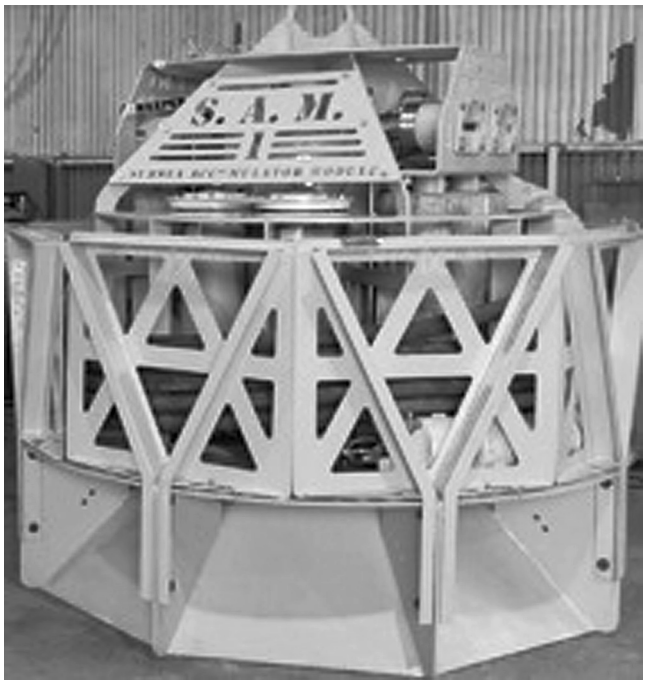


**Figure 3-13** Subsea Accumulator Module [7]

If the pressure drops, other open tree valves may begin to close, before the pressure can be restored.

If the pressure drops too much, the pilot valves in the SCM will "drop out," that is, close, causing one or more tree valves to close irrespective of whether pressure is then restored via the umbilical.

To maintain an adequate level of pressure at the subsea location, some degree of local accumulation may be required. This can be provided by individual accumulators on the SCM itself, but more usually, a self-contained skid containing several accumulator bottles is often provided, this being termed a *subsea accumulator module* or SAM.

The SAM will house sufficient LP accumulation to maintain pressure during valve operations. In addition, it is also sized to hold sufficient fluid to perform a number of subsea control operations, even if the supply from the surface no longer functions, thus giving a degree of reserve power. A trade-off must be made against the size of skid required and the amount of accumulation and this is done via a hydraulic analysis performed by the manufacturer against the specifications. Sometimes the analysis will demonstrate that HP accumulation is also required.

The requirement for an increased nitrogen precharge pressure in deepwater applications will decrease the efficiency of subsea accumulation, which will increase the number of accumulator bottles required.

#### *3.3.11.2. Components*

A SAM is a simple skid, primarily housing accumulators. Nevertheless, it must be designed, manufactured, and tested as part of the overall system, and may be designed to be retrievable for maintenance, because the accumulator precharges may periodically need replenishing.

The design may also incorporate a filter and block/bleed valves to allow flushing and testing.

Figure 3-14 shows a block diagram for the subsea accumulator module. The SAM is usually a stand-alone skid, connected via a mounting base, which is connected to the SDU or the hydraulic tubing supplying the subsea control modules. The SAM is run and retrieved in a manner similar to that for the subsea control module. To allow the SAM to be retrieved for maintenance, ROV-operable block, vent, and bypass valves are sometimes incorporated into the manifold/template tubing (where the hydraulic distribution is hard piped). This valve will allow production to continue while the unit is replaced, but tree valves should not be operated while the bypass is in operation, due to the risk of pressure drop as outlined earlier.

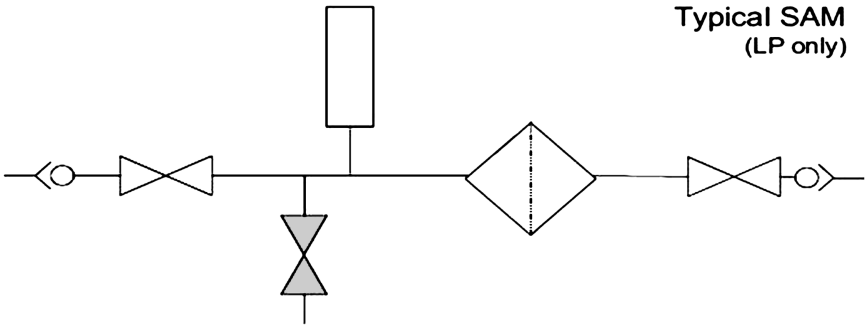


**Figure 3-14** Subsea Accumulator Module Block Diagram

When block and vent valves are not used, the SAM can be retrieved by pulling off its mounting base and relying on the self-sealing, quick-connect hydraulic couplings sealing to maintain the pressure in the hydraulic system.

Installation of the SAM is difficult, because a large force is required to mate the SAM and SAMMB (Subsea Accumulator Module Mating Block) against the closed force exerted behind the closed hydraulic poppets. It is essential that the hydraulic quick-connect couplings used in this application be fully pressure balanced to counteract the coupling mating forces, particularly in deepwater applications.

A running tool is required to run and set the SAM onto the SAMMB in deepwater applications.

## REFERENCES

[1] P. Collins, Subsea Production Control Umbilicals, SUT Subsea Awareness Course, Houston, 2008.
[2] T. Horn, G. Eriksen, W. Bakke, Troll Pilot - Definition, Implementation and Experience, OTC 14004, Houston, 2002.
[3] International Standards Organization, Petroleum and Natural Gas Industries – Design and Operation of Subsea Production Systems – Part 8: Remotely Operated Vehicle (ROV) Interfaces on Subsea Production Systems, ISO 13628-8/API 17F, 2002.
[4] International Standards Organization, Petroleum and Natural Gas Industries – Design and Operation of Subsea Production Systems – Part 4: Subsea Wellhead and Tree Equipment, ISO 13628-4, 1999
[5] National Aerospace Standard, Cleanliness Requirements of Parts Used in Hydraulic Systems, NAS 1638-64, Class 6, 2001.
[6] International Standards Organization, Hydraulic Fluid Power – Fluids – Method for Coding the Level of Contamination by Solid Particles, ISO 4406, 1999.
[7] Deep Down Company, Subsea Accumulator Module, <http://www.deepdowncorp.com/deepdown/products/sams>.